ME 4702-A EV and the Grid
04/09/2026
Group 3: Hyungjun Park, Kevin Andersen, Andrew Schnupp, Alec Grosswald, Ryland Rembert
Professor Mike Tinskey

Module 9.3: 3D Printed Attachments

Introduction

The objective of this project was to design and engineer a secure, vibration resistant mounting system for the LCD screen and the Arduino box that would be integrated onto the ninebot kart. A critical constraint of this project was the strict prohibition of non-printed hardware to connect to the ninebot. In order to make a secure fit, the design had to accommodate the specific dimensions of the hardware. The Arduino box measures about 5.8x2x2” and the LCD screen had a more complex geometry, with an overall length and width of 3.85x2.35”. The mount needed to interface with the karts frame which was made of a round tubed chassis. With this in mind the easiest way to secure the components to the cart was with snapping clips. However, since the kart operates in a dynamic environment, the mitigation of vibrations of the components to prevent wires falling out, ejection of the components, or even other damage was a primary design driver.

Modeling

All of the parts developed were designed in Solidworks, with the intent of being rigid bodies. To eliminate hardware connection to the chassis, ideas of a cantilever snap fit, sliding dovetail, interference fit, and snapping clips were discussed. The kart already had clips around the chassis to hold extra water pellet ammunition bottles so those were the best choice to use in our design. The main body of the arduino box has a wall thickness of 0.5” to provide adequate stiffness under load so the box would not break the print. In order to reduce stress concentrations and to allow the arduino to fit in easier, 0.15” fillets were added to the internal and external corners. Without these, fatigue failure was a possibility that could have been induced by the karts' vibrations over time. Additionally, the LCD screen also has fillets for the same reason.

Material Selection

Selecting the best material was a small challenge yet critical for ensuring that all parts of the mount would be able to survive the kart’s movements. PLA and TPU were the two materials that were under consideration. TPU is great for damping vibrations because it is rubber and can absorb shock better than PLA, however, with the kart’s jerky motion and rapid acceleration, the best way to get a rigid support that would hold for a great deal of time without getting worn out was PLA. It is a stronger material and won’t sway back and forth with the kart as it goes forward and reverse. The parts were sliced using BambuLabs slicer with parameters optimized for adequate strength needed. For example, there is no reason to have 100% infill on the parts and make them incredibly dense because that adds weight that is unnecessary. The prints were positioned in the software so that as little supports as possible were needed to create a better print. However, in order to reduce vibrations a gyroid infill pattern was chosen so that the vibrations could scatter along the entirety of the structure to dampen them as they occur, rather than having a simple lattice structure that would send shocks one direction, causing increased stress only on those impacted portions.

Revision

Following the fabrication process, the parts were tested and the LCD screen did not fit on the first try. The tolerance for each part was for a “snug fit” which is about a 0.2mm tolerance. The arduino box fit perfectly but an initial LCD raised mount was made and the snapping clips also did not fit snugly so they had to be redesigned as well.

The re-design process consisted of making new snapping clips modeled after the ones existing on the kart in the first place. Also, in order to attach these new snapping clips to the existing models, they had to be merged onto the models and reprinted.

A new design for the battery pack was thought of so that the clips would now clip onto the side of the chassis of the kart. Originally, the battery pack sat in the middle of the drivers legs at the base of the chassis but now with the clips there is more room for freedom and movement of this piece. In order to get it out of the way from the driver, the side of the kart was chosen as a better alternative to the middle of the driver's legs. In order to model this, the entire geometry of the box was redone so that the battery pack wouldn’t fall out during hard jumps while driving. The battery pack was turned on its side with the turn on switch on the outside of the kart so a small cutout groove was cut into the 3D part so that the user could still have access to it. The fillets remained the same size since the original print fit very well but the wall height was increased to secure the battery pack better.

The new design of the LCD screen holder was mandatory too. Originally, there was a large stand that was clipped onto the chassis and then the LCD screen case would be superglued onto the stand, however during testing the tall screen stand was not secure so it needed another supporting leg in the back. With this extra leg, the design shifted to a smaller stand and instead of using superglue to attach the LCD screen to it, the backplate of the LCD screen was merged together with the stand in order to decrease the number of parts we had and to make it easier to attach all together. The screen is propped up to about a 45° angle to give the rider a better view as he rides on the kart to make it look more like a mini dashboard. This new stand still clips on the chassis the same way as the original one did but it also has the new better snapping clips added in the back which provide the most secure point of attachment to the kart. With this extra clip the new part is much sturdier and can handle harsher bumps and vibrations compared to the original design. Since the top of the screen panel did not need to be altered, it was kept the same and attached to the back screen panel via a few bolts and lock nuts. The bolts chosen are 3mm x 20mm bolts in order to accurately fit in the already designed PCB holes of the LCD screen and long enough to go through all of the 3D printed layer. The lock nuts were picked to securely hold the panels together even under vibrations since the nut won’t spin. Once again, several fillets were added to this design to decrease unwanted stress concentrations in the complex geometry.

Challenges

One challenge that we faced was figuring out which face to 3D print this new complex screen holder. The geometry has lots of angles, fillets, and different sized parts pieced together and not a lot of clean flat sides that would allow for less supports needed. We settled on a face that was flat that would allow the majority of the part to be printed laterally under supports that would not cause printing errors on the most crucial component of the piece–the snapping clips. Additionally, when printing at the Hive, several supports were needed as mentioned previously and when someone was taking off the supports they broke the snapping clips which rendered the parts useless. So, the new dashboard stand had to get reprinted again. The battery pack also needed to be fixed because the clips were printed 90° off

orientation and the battery enclosure needed to be taller to support more of the battery to make sure it did not fall out unintentionally if a hard bump was hit or sudden jerky movements happened.
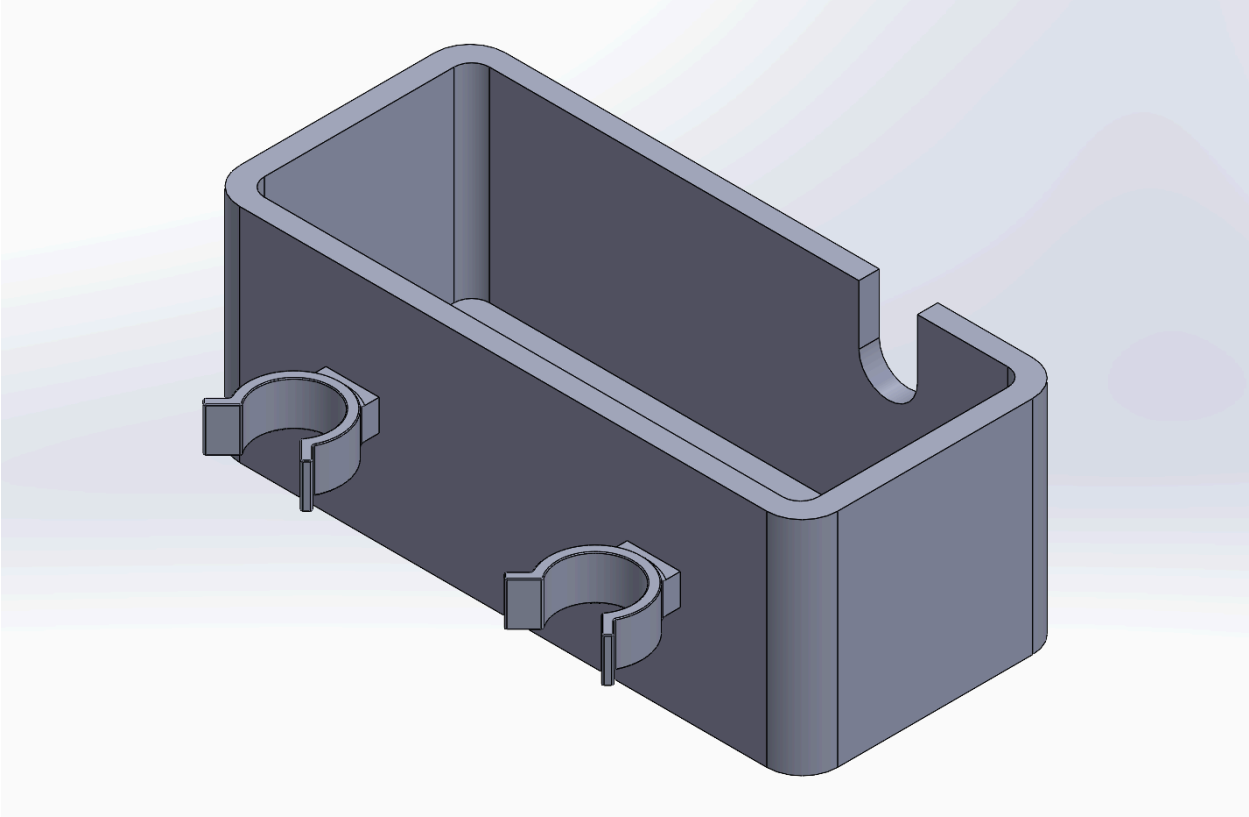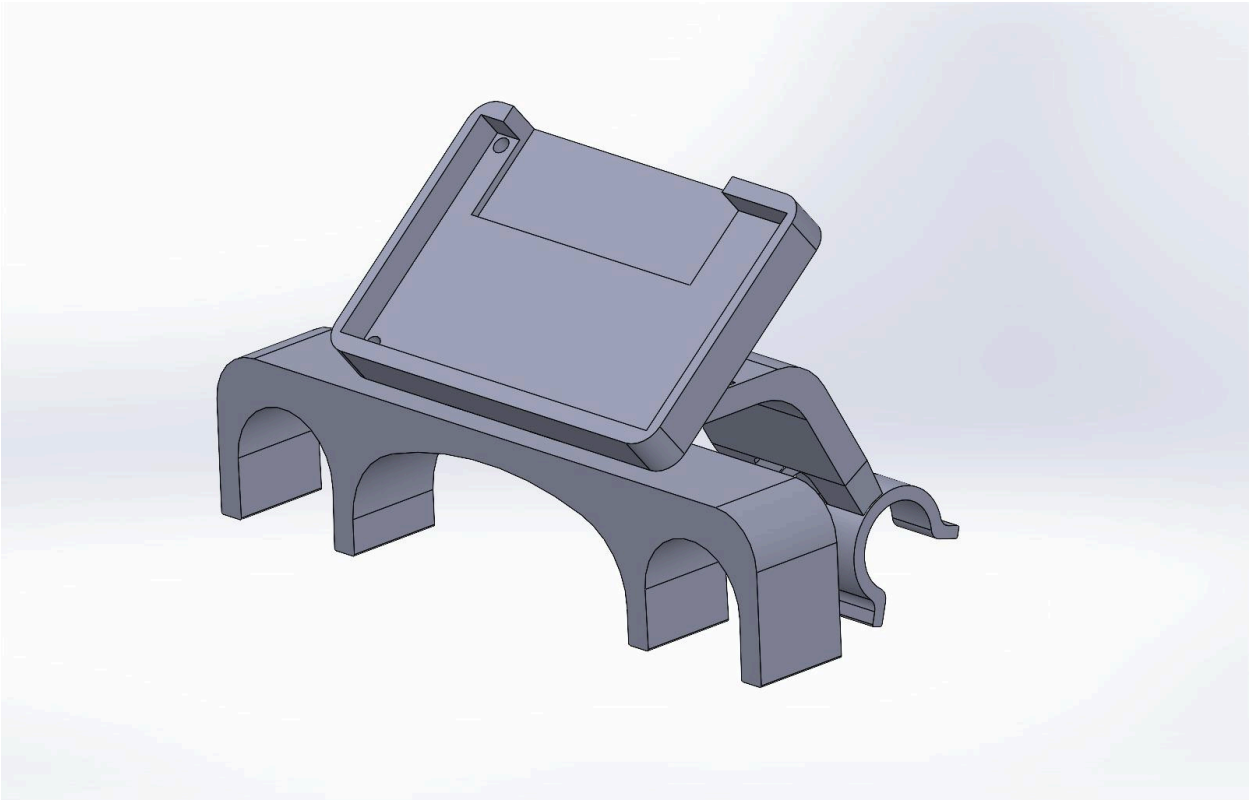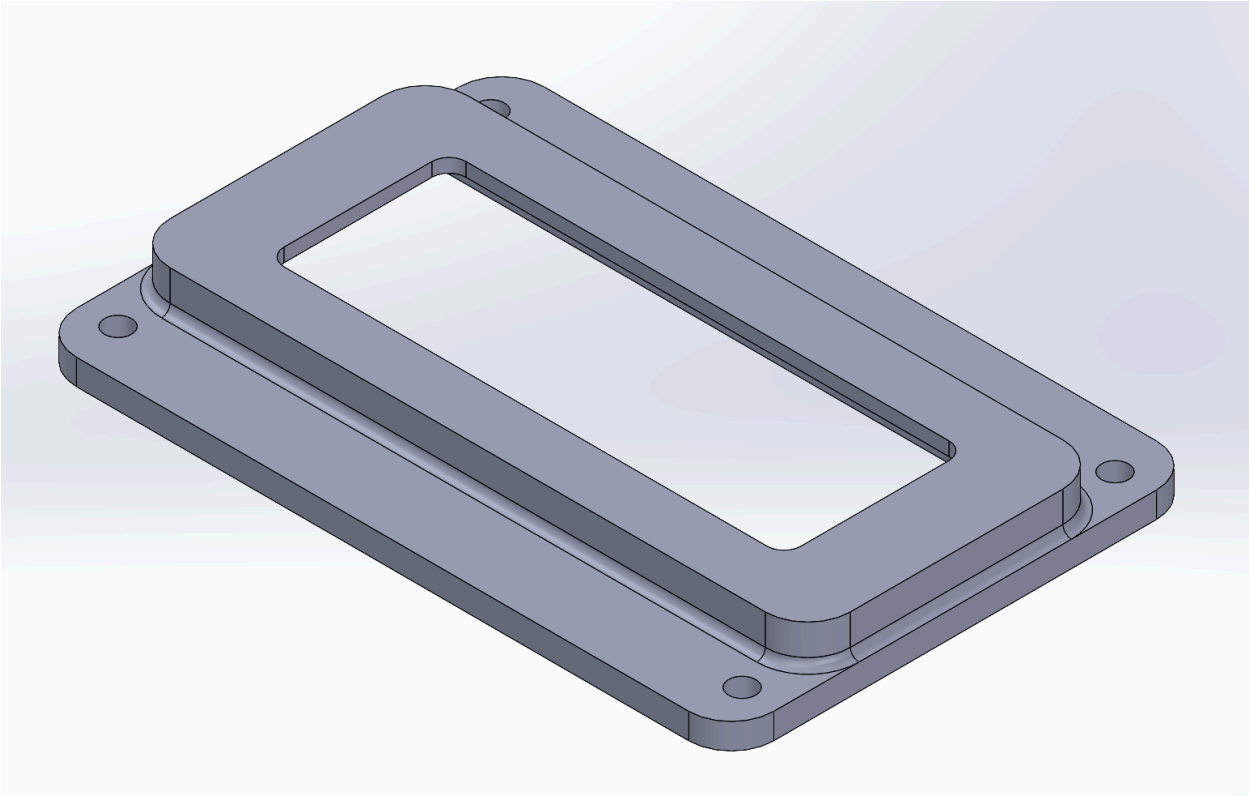
Models